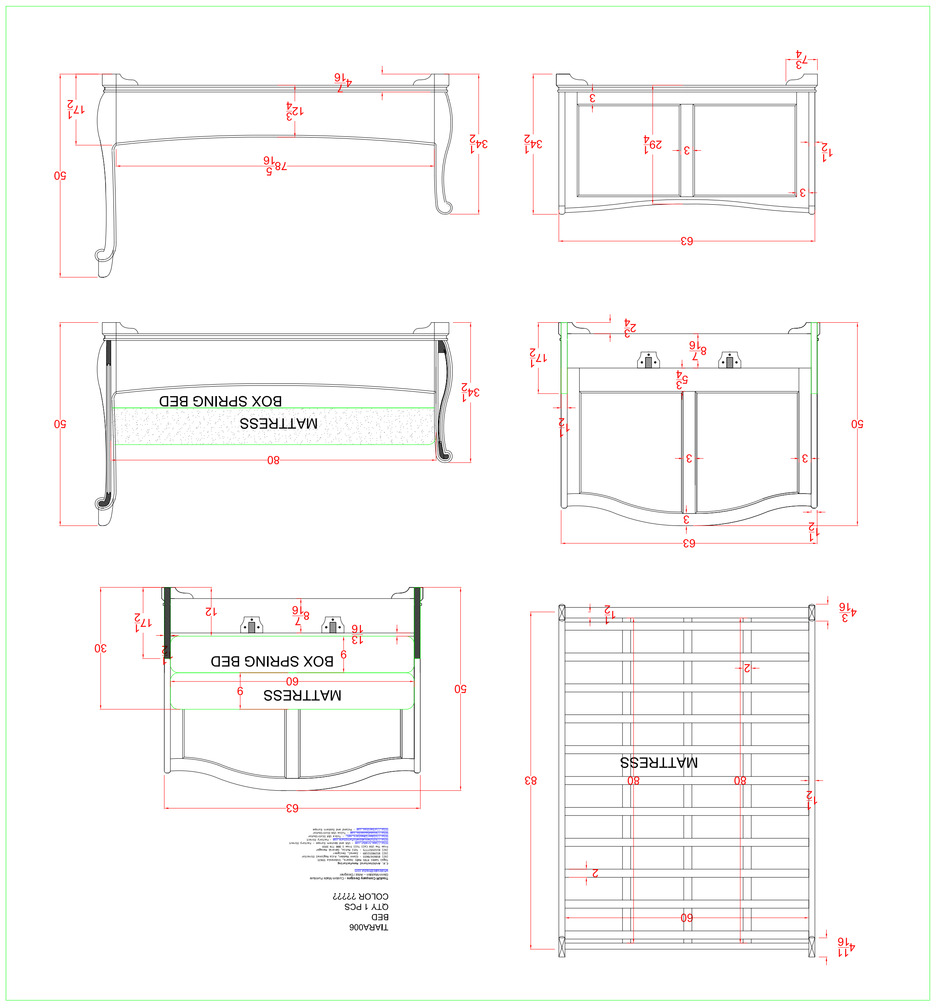

TARFA006
BED
QTY : 1 PCS
COLOR ????

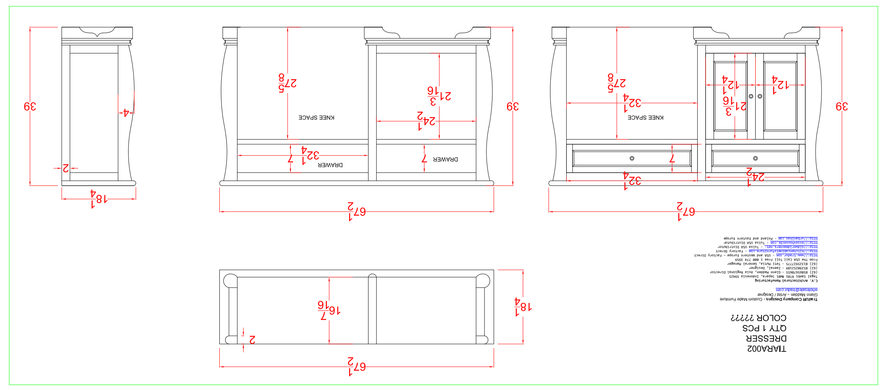

TARFA002
CHESSER
QTY 1 PCS
COLOR ????

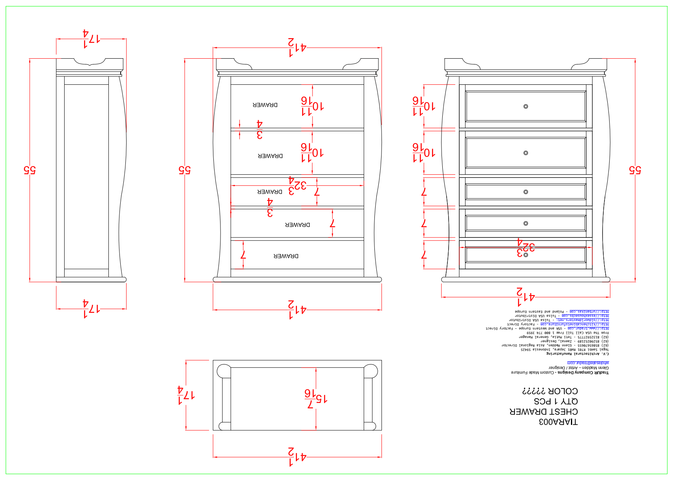

TARFA003
CHEST DRAWER
QTY 1 PCS
COLOR ????

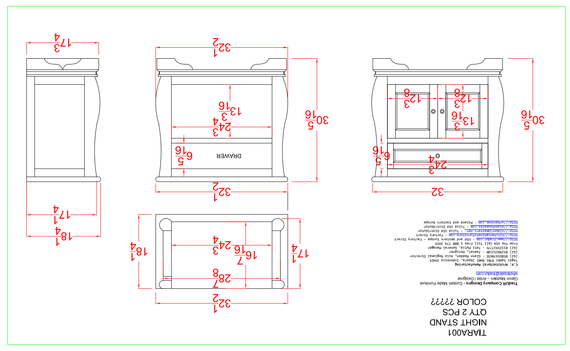

TARFA001
NIGHT STAND
QTY 2 PCS
COLOR ????

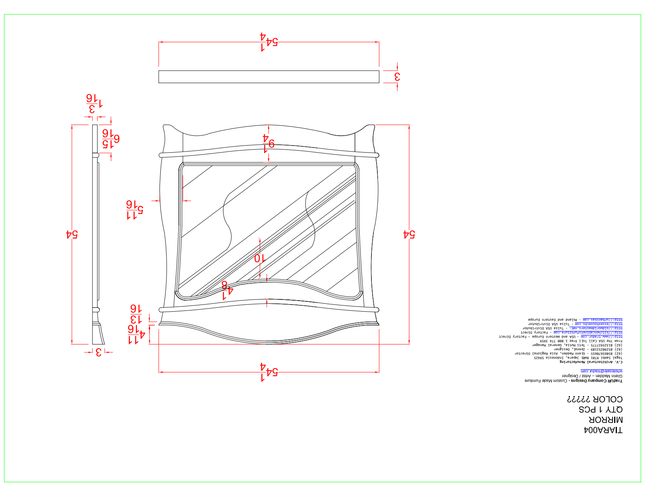

TARFA004
MIRROR
QTY 1 PCS
COLOR ????

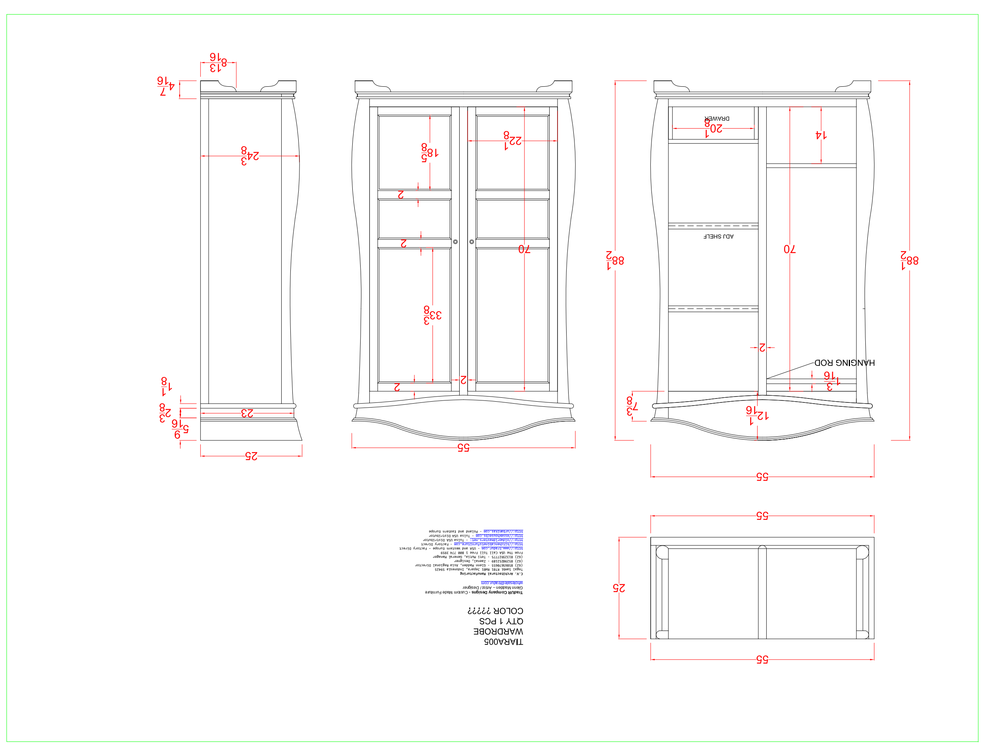

TARFA005
WARDROBE
QTY 1 PCS
COLOR ????